924-38228-002

NEXT ASSY	USED ON	LTR	REVISION	DATE
	09145-085	A	.281 WAS .390	9/18/96

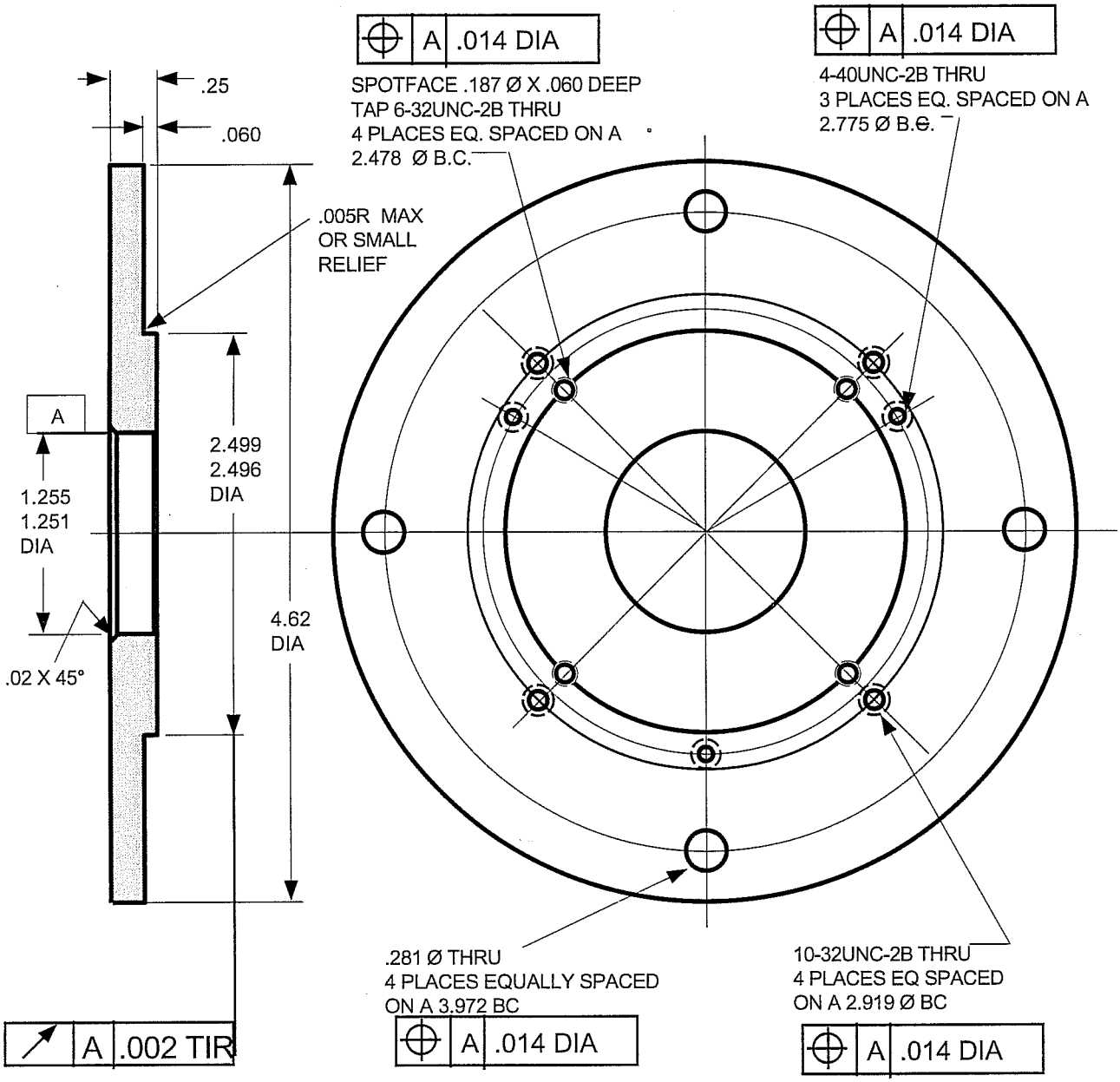

BREAK ALL EDGES .01

USED WITH H25D, H25E W/CLEATS, OR H20D

DIMENSIONS ARE IN INCHES
TOLERANCES
.XX = ±.01
.XXX = ±.005
ANGLES ± 1/2°

DWG

ENG DVC

MATERIAL DELRIN, BLACK

FINISH

SCALE 1/1

BEI MOTION SYSTEMS COMPANY
Industrial Encoder Division
7230 HOLLISTER AVENUE, GOLETA, CA 93117-2891
(805)968-0782 FAX (805)968-3154

ADAPTER, H25D/E TO 5PY

DELRIN

CODE IDENT 12050

DWG NO. 924-38228-002

REV A